Benha University
Faculty of Engineering- Shoubra
Electrical Engineering Dept.
CCE Credit Hours Program

Mid-Term Exam [30 Degree]
Date: 24/11/2018
CCE 201: Solid State Elect. Devices
Duration : 1 Hour

[1] In each of the ideal-diode circuits shown in Fig. 1, v_i is a 10-kHz, 10-V peak sine wave. Sketch the waveform resulting at v_o. What are its positive and negative peak values?

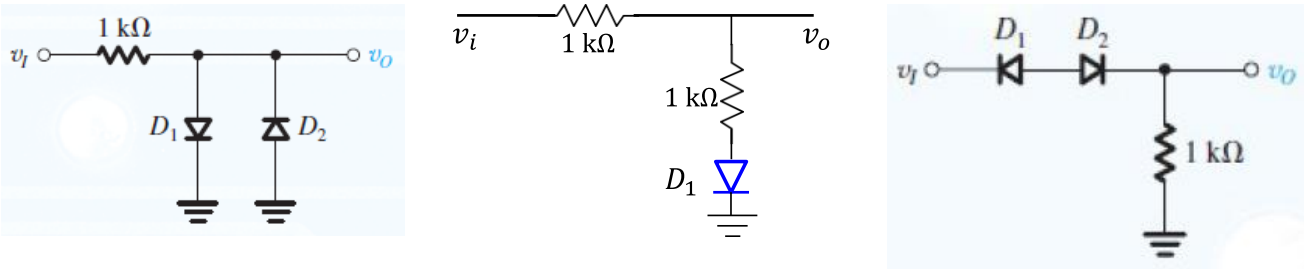

(a) (b) (c)

Fig. 1

[2] Find the values of I and V in the circuits shown in Fig. 2. Use the Ideal diode model.

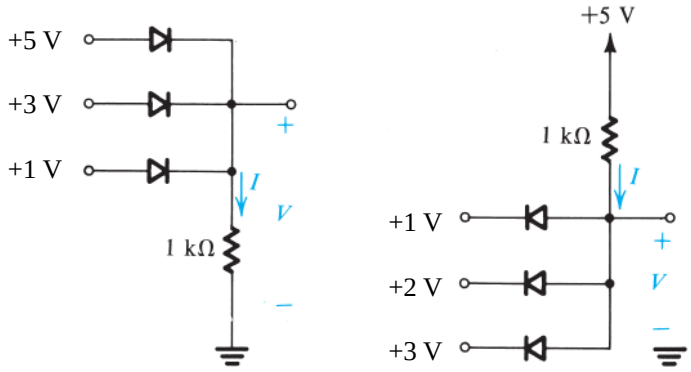

(a) (b)

Fig. 2

[3] A silicon junction diode has $v = 0.7$ V at $i = 1$ mA. Find the voltage drop at $i = 0.1$ mA and $i = 10$ mA.

[4] Consider the diode circuit in Fig. 3 Obtain and plot the I_X-$V_X$characteristics of the circuit given below. Assume the diode is ideal and $R_1 = R_2 = 25k$

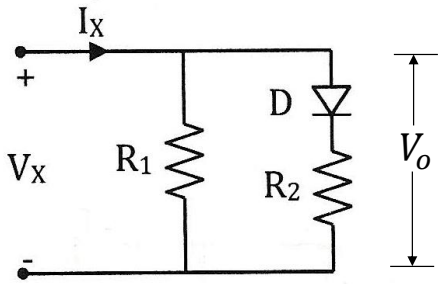

Fig. 3